Non-invasive Human Body Electrophysiological Measurements using Displacement Current Sensors

C. J. Harland, T. D. Clark and R. J. Prance
Centre for Physical Electronics and Quantum Technology
University of Sussex, Brighton, Sussex, BN1 9QT, U.K.

Abstract – We describe the displacement current (electric potential) sensor for use in the non-invasive detection of human body electrical signals. The sensor, based on commercially available electrometer amplifiers, operates by monitoring the displacement current (effectively an electric field changing with time) between the body and the sensor input electrode. By adopting various electronic feedback techniques, combined with bias and stabilization circuits, we have been able to greatly enhance the input impedance and sensitivity of these amplifiers compared with the standard electrode systems in use today. In our current systems input impedances are typically $10^{15}\Omega$, with a minimum noise floor of 30nV/√Hz at 1Hz. With this capability these sensors can be used to record body electrical signals remarkably well. Furthermore, since no real charge current is required for these sensors to function, we are able to dispense with the usual electrolytic paste contact to the surface of the body. As a consequence displacement current sensors are perfectly bio-compatible. In this paper we provide several applications of these sensors, in particular to the ECG and EOG.

Key words – body electrophysiology, displacement current, electric potential sensor.

I. Introduction

For the best part of a century [1] recordings of body electrical signals have relied on resistive contact electrode sensors where real charge current contact is made through saline or electrolytic paste. In standard practice today these signals are picked up by paste-on electrodes (almost invariably involving an Ag/AgCl interface) in direct resistive contact with the body surface. Although there is no question that electrodes of this type have rendered sovereign service, in essence in their performance these have remained unchanged over the years. What has made a huge difference has been the application of modern electronic data acquisition and processing techniques. In this paper we describe a radically new approach to the detection of body electrical signals using displacement current sensors. The new sensor relies on being able to detect the displacement current (proportional to the time rate of change of the electric field) between the body and the sensor input electrode. Since there is no real charge current involved in their operation, there is no need for (resistive) electrical contact and, as a consequence, no requirement for a conducting electrolytic paste between the sensor electrode and the skin. The sensor is built around commercially available electrometer amplifiers. Although these have a high input impedance and considerable sensitivity both can be boosted by the application of electronic feedback techniques used in conjunction with appropriate biasing and stabilization circuits [2]. In figure 1 we show a block diagram of a typical displacement current sensor probe including feedback and biasing circuitry. As an example the effective input impedance of the operational amplifier depicted in figure 1 can be enhanced by reducing the input cable capacitance to the sensor through guarding, as shown.

II. Applications

The basic requirements for wearable body sensors focus very much on convenience of operation, bio-compatibility, miniaturization, scalability in the sense of creating sensor arrays and low power consumption. Without doubt displacement current sensors meet the first two requirements extremely well. Thus, these sensors can simply be held in placed on the skin, without any prior preparation, by means of a suitable harness. Furthermore, there is absolutely no bio-compatibility problem - these sensors do not irritate the skin at all and can be worn for an unlimited period. If a reduction in signal strength can be tolerated, sensors can be placed at a distance (up to 1 metre) from the surface of the body and still pick up the heart electrical signals [3]. With regard to the remaining three requirements, we have already constructed 5mm diameter, cylindrical configuration, sensor/electrode systems that we are confident can be made even smaller. In addition, without conducting paste to cause cross-coupling, these sensors can be mounted very close together in two dimensional arrays to form the basis for imaging systems. In figure 2 we provide an example of the quality of ECG that can be acquired from the surface of the chest with a pair of displacement current sensors mounted in the V4-lead configuration without the need for any other electrical connection to the body. Taken in real time, the detail is quite apparent including, perhaps, a surface electrical signature for the cardiac His bundle depolarization

(His) [4]. Since the input impedance of these sensors is extremely large compared with that of the surface of the body, there is no electrical loading down of the body. Accordingly, we can mount two of these sensors essentially where we choose as long as these are positioned on opposite sides of the heart and arranged electronically as a differential pair so as to null out the effect of unwanted (and distant) signals or noise. In figure 3 we show schematically a differential pair of wrist-watch mounted sensor probes with the ECG data subsequently transmitted wireless to a local receiving station. In order to make this an ambulatory system we arranged for the sensors and radio links to be battery operated. In figure 4 we show a typical ECG waveform acquired using this remote (up to 30 metres) link. Again, the quality of these waveforms is very good. At the moment the two sensors require a common reference potential provided by a conductor linking them together. However, it may well be that this link can be eliminated through the use of various electronic techniques. Of course, many different body electrical signals could be detected in just the same way. As a second example, therefore, we show in figure 5 our recording of the EOG (electro-oculogram) generated by muscles controlling eye and eyelid movement, using a differential pair of sensor probes mounted in a convenient harness. In figures 5(a) and 5(b) we show EOGs with vertical and horizontal eye movements and in figures 5(c) and 5(d) we show EOGs with eyelid blinking [5].

III. Conclusions

In this paper we have discussed the use of a new kind of sensor – the displacement current sensor – that looks extremely promising for the detection and, in due course, the imaging of human body electrical signals. The combination of an ultra low noise floor, complete bio-compatibility and scalability augers well for the future.

IV. References

[1] Snellen H.A., Willem Einthoven (1860–1927) Father of Electrocardiography. Dordrecht: Kluwer, 1994.

[2] Prance R.J., Debray A., Clark T.D., Prance H., Nock M., Harland C.J. and Clippingdale A.J.. An Ultra-Low-Noise Electrical-Potential Probe for Human-Body Scanning. Meas. Sci. Technol. (2000) 11 pp1-7.

[3] Harland C.J., Clark T.D., and Prance R.J.. Electric potential probes - new directions in the remote sensing of the human body, Meas. Sci. Technol., vol. 13 (2002) pp. 163-169.

[4] Harland C.J., Clark T.D., and Prance R.J.. High resolution ambulatory electrocardiographic monitoring using wrist mounted electric potential sensors. Meas. Sci. Technol. 14 (2003) 923-928.

[5] Harland C.J., Clark T.D. and Prance R.J.. Applications of electric potential (displacement current) sensors in human body electrophysiology. Submitted to IEEE Special Issue on Industrial Process Tomography (2004).

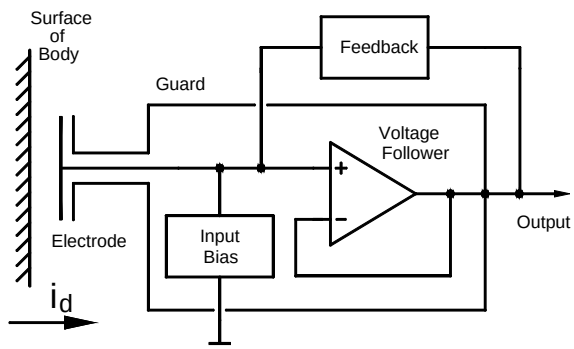

Figure 1. Block diagram of a typical electric potential sensor probe, showing the sensor electrode, and the electrometer amplifier (i_d is the displacement current).

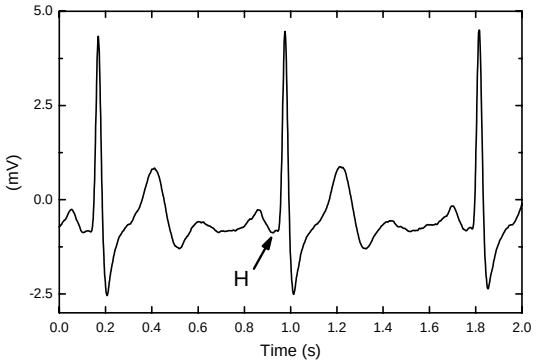

Figure 2. An example of the quality of ECG that can be acquired from the surface of the chest with a pair of displacement current sensors mounted in the V4-lead configuration. The feature 'H' corresponds in timing to the cardiac His bundle depolarization.

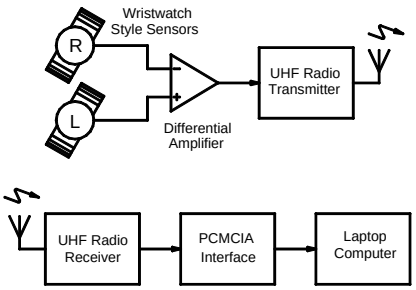

Figure 3. Schematic diagram of a differential pair of electric potential sensor probes mounted in wrist-watch format and configured as a wireless ambulatory ECG data collection system.

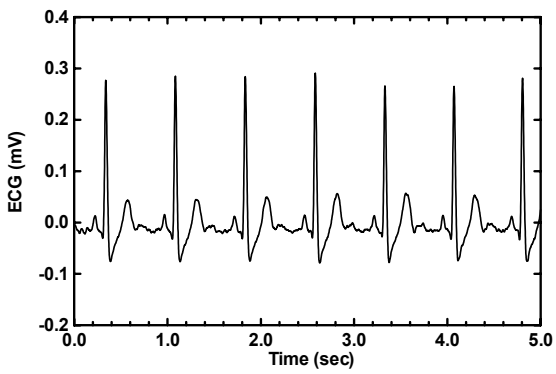

Figure 4. An example of a I-lead ECG detected from the wrists using the wireless ambulatory ECG data collection system as shown in figure 3.

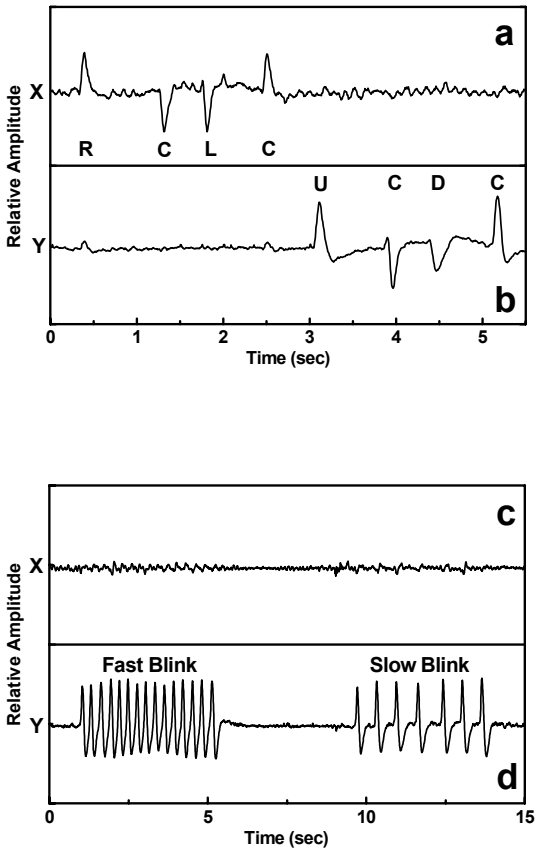

Figure 5. Examples of electro-oculograms (EOGs), showing the voltage deflections resulting from eye movements when using sensors located around the eyes. X and Y correspond to movements of the eyeballs in the left-right and up-down directions respectively. (a) The result of moving the eyeballs to view from centre to right (R), back to the centre (C), centre to left (L) and back to centre (C). (b) The result of moving the eyeballs to view from centre upwards (U), back to the centre (C), from centre downwards (D) and back to the centre (C). (c) and (d) show the X and Y voltage deflections resulting from fast and slow blinking of the eyelids.